MILE HERTZ MACHINERY

NINGBO MILEHERTZ MACHINERY CO., LTD

NINGBO MILEHERTZ MACHINERY CO., LTD

Mobile/WhatsApp: +86 13858356336

E-MAIL: sales@milehertz.com

Web: www.milehertz.com

Add: No.1, Yingxin Second Road, pneumatic industrial park, Xikou Town, Fenghua District, Ningbo City, Zhejiang Province, China.

CONTENTS

01 Company Introduction

03 Diaphragm Accumulator Section Model

05 Diaphragm Accumulator Dimension and Specification

09 Diaphragm Accumulator Application

11 National Standard Accumulator

13 PED type Bladder Accumulator

15 Bladder Accumulator (ASME)

17 Piston Accumulator

CONTENTS

19 Bladder Repair Kits

20 Accumulator QXF Charging Valve

21 Accumulator Charging Kit

23 Accumulator Clamp

24 Energy-saving Pneumatic Hydraulic Station

25 GLC Series Calandria Oil Cooler

27 KHB KHM Series High Pressure Ball Valve (International Standard)

29 KHB3K(BK3) Two-position Three-way High Pressure Ball Valve(International Standard)

CONTENTS

31 KHP KHP3K Series Plate High Pressure Ball Valve

34 KHB-AS KHM-AS Series High Pressure Ball Valve (with welded pipe)

Company Introduction

ABOUT US

As a accumulator company, Milehertz never stops improving.
Milehertz currently has established partnerships with customers in more than 30 countries on five continents around the world. With Milehertz's expertise in hydraulics, systems and fluid engineering, we are committed to providing solutions that our customers really need. Milehertz is always innovating and testing, and we pursue a safer and greener future.

16949

ISO9001
ISO 9001

U
ASME Stamp

CE

EAC

Burst

Diaphragm Accumulator Section Model

Model: MDA—Max Working Pressure—Volume—Fluid Port—Shell Materail—Diaphragm Material—Gas Connection

MDA	330	— 0.5 —	G1/2 F —	C	N	— W

Model

MDA: Diaphragm Accumulator

Gas Connection

W: Metric M28X1.5

W2: Metric M16X2

W3: Metric M14x1.5

W4: US 5/8-18UNF

W5: 8V1 IS04570

W6: British G1/4

W7: Not Rechargeable

Volume

0.075L-3.5L(Model in data sheet)

Max Working Pressure

330Bar (100Bar/210Bar/250Bar)

Valve Seat

Shell Material

C: Carbon Steel

S: Stainless Steel (304/316L/2205)

Diaphragm Material

N: Nitrile Rubber(NBR)

L: Butyl Rubber(IIR)

H: Hydrogenated Nitrile(HNBR)

E: (EPDM)

E: Epichlorohydrin Copolymer(ECO)

F: Fluororubber(FPM)

Fluid Connection

M: Metric Thread(GB/T192-2003)

U: US Thread (UN)

G: British Pipe Thread(1S0228)

N: US Pipe Thread(NPT)

MM: Metric for Female and Male Thread

UM: US Female Thread and Metric Male Thread

GM: British Female Thread and Metric Male Thread

Internal and external thread (F-internal thread/M-external thread)

Pre-charged Pressure According to Customer’s Need

Diaphragm Accumulator Dimension and Specification

EXTERNAL DIMENSIONS OF DIAPHRAGM ACCUMULATOR

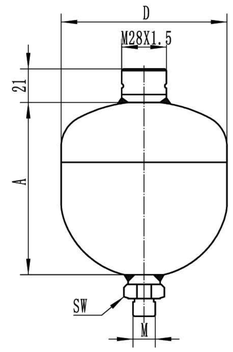

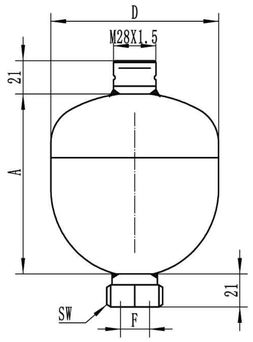

SPECIFICATION

Model	Max Working Pressure (BAR)	Max Working/ Charging Pressure	Volume (L)	Weight (KG)	Diameter D(mm)	Main Height A(mm)	Common Fluid Connection Thread			Max Flow Rate (L/min)	SW (mm)
							Metric	British	US		
MDA	100	8 : 1	0.075	1.0	66	72	M14x1.5	G1/2	9/16-18 UNF	38	32
			0.16	1.2	75	82					
			0.25	1.8	89	93	M18x1.5		3/4-16 UNF	95	
	210		0.32	2.1	95	99					
			0.5	2.9	111	113.8					
			0.75	4.2	125	128.5					
	250		1.0	5.4	142	140					
			1.4	8.0	157	169					
			2.0	10.0	173	193	M22X1.5	G3/4	1 1/16-12 UN	150	41
	330	4 : 1	2.5	10.6	173	201					
			2.8	11.2	173	228					
			3.5	13.8	173	275.2					

Diaphragm Accumulator Dimension and Specification

2.8L

2.5L

2.0L

1.4L

1.0L

0.75L

0.5L

0.32L

0.16L

DIMENSIONS OF STAINLESS STEEL DIAPHRAGM ACCUMULATOR

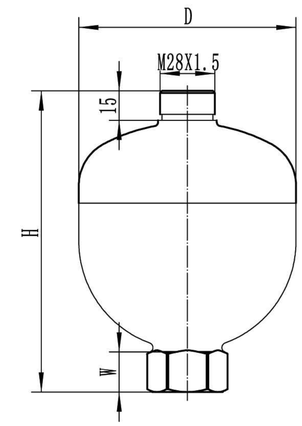

SPECIFICATION

Model	Max Working Pressure (BAR)	Max Working/ Charging Pressure	Volume (L)	Weight (KG)	Diameter D(mm)	Overall Height H(mm)	Fluid Connection Thread(O-Ring)	Max Flow Rate (L/min)	W(mm)	SW (mm)
MDA	100	8 : 1	0.16	1.2	75	118	G1/2	38	17	36
			0.32	2.1	95	137		95		
	210		0.5	2.9	111	152			21	
			0.75	4.2	125	166				
			1.0	5.4	142	181				
	250		1.4	8.0	157	210				
	330		2.0	10.0	173	231	G3/4	150		46
		4 : 1	2.5	10.6	173	239				
			2.8	11.2	173	266				

Diaphragm Accumulator Application

01 Milehertz Stainless Steel Diaphragm Accumulator

Stainless Steel Diaphragm Accumulator

Milehertz Stainless Steel Diaphragm Accumulator adopts the integrated design process. With strong pressure resistance, corrosion resistance and high stability, it is widely used in chemical industry, biotechnology, environmental protection and pollution clean-up fields.

02 Milehertz 45Mpa High Pressure Diaphragm Accumulator

Milehertz 45Mpa High Pressure Diaphragm Accumulator is not limited to the conventional design. By optimizing the internal structure, its pressure resistance is greatly improved, which can meet the needs of customers in high-pressure area.

45 Mpa High Pressure Diaphragm Accumulator

03 Milehertz Diaphragm Accumulator Valve Block

Diaphragm Accumulator Valve Block

Milehertz Diaphragm Accumulator Valve Block perfectly realizes electro-hydraulic integration, providing customers with the overall solution of hydraulic system.

04 Milehertz -40℃Low Temperature Diaphragm Accumulator

Milehertz -40℃Low Temperature Diaphragm Accumulator selects hydrogenated nitrile rubber to ensure that the product can work normally at -40℃ and protect equipment in extreme bad weather.

National Standard Accumulator

1 Ordering Code

NXQ ※ — ※ / ※ — ※ — ※ — ※

Product Name: NXQ-National Standard Accumulator
BNXQ-Stainless Steel Accumulator

Structure Type: A-Type A , AB-Type AB

Nominal Volume: 0.4~250L

Nominal Pressure: 10、20、31.5MPa、custom made

Connection Type: L-Thread Connection, F-Flange Connection

Fatigue Test Category

Medium: Y-Hydraulic
R-Emulsion
EG-Ethylene Glycol

Temperature: -20°C~+93°C

2 Stucture and Dimension

NXQA accumulator Thread connection
NXQA—※ / ※—L—※

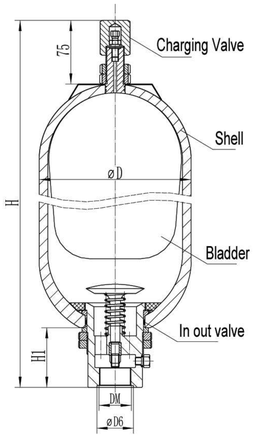

NXQAB accumulator Thread connection
NXQAB—※ / ※—L—※

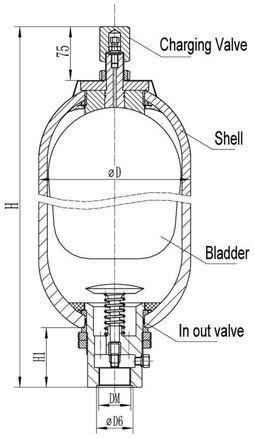

NXQ accumulator Flang connection
NXQ—※ / ※—F—※

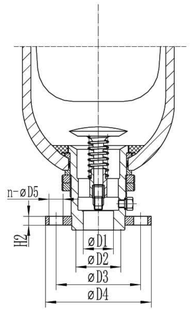

3 Dimensions

Model	Pressure (MPa)	Max discharge flowrate L	Max discharge flowrate F	Volume (L)	Connection L	Connection F	Dimension (mm) DM	ΦD1	ΦD2	ΦD3	ΦD4	n-ΦD5	ΦD6	H1	H2	ΦD	Weight (Kg)
					H												
NXQ※-0.4/※-L-※	10	1		0.4	250	-	M27x2	-	-	-	-	-	32 (Φ32x3.1)	52	-	89	4.9
NXQ※-0.63/※-L-※				0.63	320	-											5.6
NXQ※-1/※-L-※				1	320	-										114	7.2
NXQ※-1.6/※-L/F-※		3.2	6	1.6	355	370	M42x2	42	50 (Φ50x3.1)	97	130	6-Φ17	50 (Φ50x3.1)	66	25	152	12.5
NXQ※-2.5/※-L/F-※				2.5	420	435											15
NXQ※-4/※-L/F-※				4	530	545											18.5
NXQ※-6.3/※-L/F-※				6.3	700	715											25.5
NXQ※-10/※-L/F-※		6	10	10	660	685	M60x2	50	70 (Φ70x3.1)	125	160	6-Φ21	70 (Φ70x3.1)	90.5	32	219	38.5
NXQ※-16/※-L/F-※				16	870	895											50.5
NXQ※-20/※-L/F-※				20	1000	1025											58
NXQ※-25/※-L/F-※				25	1170	1195											68
NXQ※-32/※-L/F-※				32	1410	1435											82
NXQ※-40/※-L/F-※				40	1690	1715											98
NXQ※-50/※-L/F-※				50	2040	2065											118
NXQ※-20/※-L/F-※	20	10	15	20	685	700	M72x2	60	80 (Φ80x3.1)	150	200	6-Φ26	80 (Φ80x3.1)	110	40	299	80
NXQ※-25/※-L/F-※				25	780	795											92
NXQ※-32/※-L/F-※				32	910	925											108
NXQ※-40/※-L/F-※				40	1050	1065											125
NXQ※-50/※-L/F-※				50	1240	1255											148
NXQ※-63/※-L/F-※				63	1470	1485											176
NXQ※-80/※-L/F-※				80	1810	1825											218
NXQ※-100/※-L/F-※				100	2190	2205											266
NXQ※-63/※-L/F-※	31.5	15	20	63	1188	1203	M80x3	80	95 (Φ95x3.1)	170	230	6-Φ26	90 (Φ90x3.1)	116	45	351	191
NXQ※-80/※-L/F-※				80	1418	1433											228
NXQ※-100/※-L/F-※				100	1688	1703											270
NXQ※-125/※-L/F-※				125	2008	2023											322
NXQ※-160/※-L/F-※				160	2478	2493											397
NXQ※-100/※-L/F-※		20	25	100	1315	1360	M100x3	98	115 (Φ115x5.7)	220	255	8-Φ26	115 (Φ115x5.7)	116	50	426	441
NXQ※-160/※-L/F-※				160	1915	1960											552
NXQ※-200/※-L/F-※				200	2315	2360											663
NXQ※-250/※-L/F-※				250	2915	2960											786

The number in bracket is the size of O-seal ring which meets GB/1235-76 Note: 1MPa=10bar=10.2kg/cm^2

PED type Bladder Accumulator

1 Ordering Code

NXQ ※ — ※ / ※ — ※ — ※

- Product Name: Standard Accumulator
- Structure Type: A-Type A , AB-Type AB
- Nominal Volume: 0.4~250L
- Nominal Pressure: 10、20、31.5MPa、custom made
- Connection Type: L-Thread Connection, F-Flange Connection
- Medium: Y-Hydraulic
  R-Emulsion
  EG-Ethylene Glycol
- Temperature: -20°C~+93°C

2 Stucture and Dimension

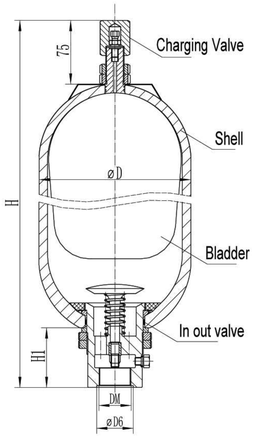

Standard

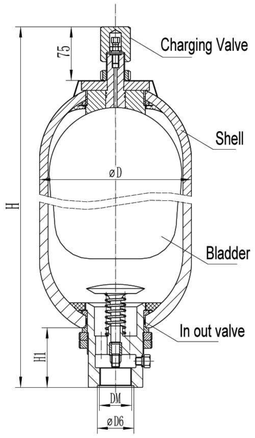

Top repairable

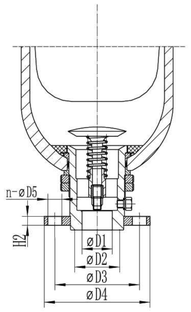

Accumulator flang connection

3 Dimensions

Model	Pressure (MPa)	Max discharge flowrate		Volume (L)	Connection		Dimension (mm)										Weight (Kg)
		L	F		L	F											
					H		DM	ΦD1	ΦD2	ΦD3	ΦD4	n-ΦD5	ΦD6	H1	H2	ΦD	
NXQ※-0.4/※-L-※	10	1		0.4	250	-	M27x2	-	-	-	-	-	32 (Φ32x3.1)	52	-	89	4.9
NXQ※-0.63/※-L-※				0.63	320	-											5.6
NXQ※-1/※-L-※				1	320	-										114	7.2
NXQ※-1.6/※-L/F-※		3.2	6	1.6	355	370	M42x2	42	50 (Φ50x3.1)	97	130	6-Φ17	50 (Φ50x3.1)	66	25	152	12.5
NXQ※-2.5/※-L/F-※				2.5	420	435											15
NXQ※-4/※-L/F-※				4	530	545											18.5
NXQ※-6.3/※-L/F-※				6.3	700	715											25.5
NXQ※-10/※-L/F-※		6	10	10	660	685	M60x2	50	70 (Φ70x3.1)	125	160	6-Φ21	70 (Φ70x3.1)	90.5	32	219	38.5
NXQ※-16/※-L/F-※				16	870	895											50.5
NXQ※-20/※-L/F-※				20	1000	1025											58
NXQ※-25/※-L/F-※				25	1170	1195											68
NXQ※-32/※-L/F-※				32	1410	1435											82
NXQ※-40/※-L/F-※				40	1690	1715											98
NXQ※-50/※-L/F-※				50	2040	2065											118
NXQ※-20/※-L/F-※	20	10	15	20	685	700	M72x2	60	80 (Φ80x3.1)	150	200	6-Φ26	80 (Φ80x3.1)	110	40	299	80
NXQ※-25/※-L/F-※				25	780	795											92
NXQ※-32/※-L/F-※				32	910	925											108
NXQ※-40/※-L/F-※				40	1050	1065											125
NXQ※-50/※-L/F-※				50	1240	1255											148
NXQ※-63/※-L/F-※				63	1470	1485											176
NXQ※-80/※-L/F-※				80	1810	1825											218
NXQ※-100/※-L/F-※				100	2190	2205											266
NXQ※-63/※-L/F-※	31.5	15	20	63	1188	1203	M80x3	80	95 (Φ95x3.1)	170	230	6-Φ26	90 (Φ90x3.1)	116	45	351	191
NXQ※-80/※-L/F-※				80	1418	1433											228
NXQ※-100/※-L/F-※				100	1688	1703											270
NXQ※-125/※-L/F-※				125	2008	2023											322
NXQ※-160/※-L/F-※				160	2478	2493											397
NXQ※-100/※-L/F-※		20	25	100	1315	1360	M100x3	98	115 (Φ115x5.7)	220	255	8-Φ26	115 (Φ115x5.7)	116	50	426	441
NXQ※-160/※-L/F-※				160	1915	1960											552
NXQ※-200/※-L/F-※				200	2315	2360											663
NXQ※-250/※-L/F-※				250	2915	2960											786

Note: 1.Contact us if special requirement is needed.
2. Design change is retained by our company and amendment is effected without further notice.
3. If customers need to increase the flow of production can be ordered.

Bladder Accumulator (ASME)

1 Ordering Code

BA(TA) — ※ / ※ — ※ — ※

Structure:
Bottom Dismantlement: BA
Top Dismantlement: TA1、TA2

Volume: 0.15~15gal

Maximum Operating Pressure: 3000PSI~5000PSI

Medium: O-Hydraulic Oil

Connection Type: L-Thread Connection
F-Flang Connection

2 Structure and Dimension

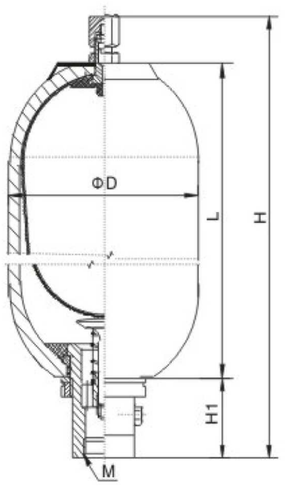

Type BA

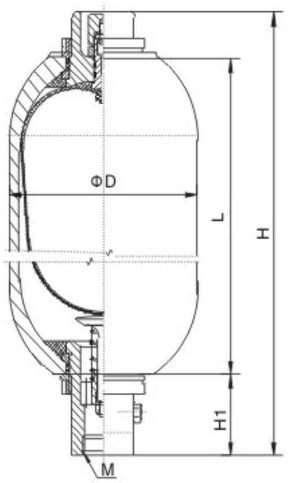

Type TA1

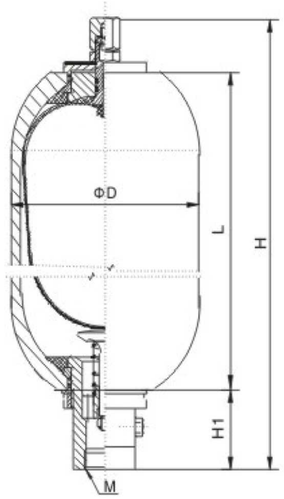

Type TA2

Design pressure	3000psi（20.7MPa）
	5000psi（34.5MPa）
Test pressure	3900psi(27MPa)
	6500psi(44.9MPa)
Medium	Oil, N_2
Operating temperature	-4°F～158°F(-20°C～70°C)
Charging pressure	≤90%min
	≥25%max
Connection type	Thread connection
	Flang connection
Fixation	Fastening ring& Supporting seat
Installation	Vertically mounted
Gas connection	8V1 ISO 4570

3000PSI

Model	Volume		Dimensions									Netwt	
			H		L		H1		D		M		
	gal	L	in	mm	in	mm	in	mm	in	mm	G	IB	kg
BA-0.15/3000-※-※	0.15	0.6	12.60	320	7.48	190	2	51	3.5	89	3/4”	12.4	5.6
BA-0.25/3000-※-※	0.25	1	12.60	320	7.48	190			4.5	114	3/4”	17.6	8
BA-0.6/3000-※-※	0.6	2.5	16.54	420	11.02	280	2.6	66	6	152	1 1/4”	30	14
BA-1.0/3000-※-※	1	4	20.87	530	15.35	390						40	18
BA(TA)-2.5/3000-※-※	2.5	10	21.56	550	16.14	410	3.5	89	9	229	2”	81	37
BA(TA)-5/3000-※-※	5	20	33.46	850	27.95	710						125	57
BA(TA)-8/3000-※-※	8	32	47.64	1210	42.13	1070						176	80
BA(TA)-10/3000-※-※	10	40	56.70	1440	51.18	1300						209	95
BA(TA)-11/3000-※-※	11	44	61.42	1560	55.90	1420						227	103
BA(TA)-14/3000-※-※	14	56	75.60	1920	70.08	1780						288	130
BA(TA)-15/3000-※-※	15	60	80.31	2040	74.80	1900						303	138

5000PSI

Model	Volume		Dimensions									Netwt	
			H		L		H1		D		M		
	gal	L	in	mm	in	mm	in	mm	in	mm	G	IB	kg
BA(TA)-2.5/5000-※-※	2.5	10	21.26	540	15.75	400	3.5	89	9.65	245	2”	139	63
BA(TA)-5/5000-※-※	5	20	32.68	830	27.17	690						203	92
BA(TA)-8/5000-※-※	8	32	46.46	1180	40.94	1040						280	127
BA(TA)-10/5000-※-※	10	40	55.12	1400	49.61	1260						329	149
BA(TA)-11/5000-※-※	11	44	59.84	1520	54.33	1380						355	161
BA(TA)-14/5000-※-※	14	56	73.62	1870	68.11	1730						432	196
BA(TA)-15/5000-※-※	15	60	78.35	1990	72.83	1850						460	209

Note: 1.BA: Bottom dismantlement TA: Top dismantlement
2.Special accumulators not in the list, with increased flowrate or top dismentlement can be ordered accordingly.

Piston Accumulator

1 Ordering Code

HXQ ※ — ※ / ※ — ※ — ※

- Product Name: Piston Accumulator
- Structure Type: A
- Nominal Volume: 0.25~400L
- Nominal Pressure: 10、20、31.5Mpa
- Connection Type: L-Thread Connection / F-Flange Connection
- Medium: Y-Hydraulic Liquid / R-Emulsion / Q-Others

2 Structure and Dimension

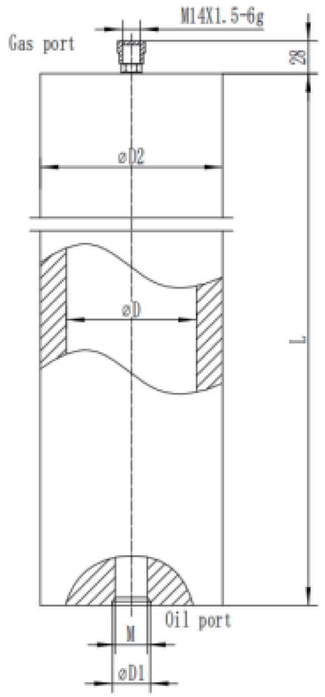

Model	Pressure(MPa)	Volume(L)	Dimension(mm)					Weight(kg)
			ΦD	M	ΦD1	ΦD2	L	
HXQ-※-0.22/※-※-※	10~99	0.22	63	M22×1.5	35	83	225	7.1
HXQ-※-0.49/※-※-※		0.49					310	8.5
HXQ-※-1/※-※-※		1					470	11.5
HXQ-※-2/※-※-※		2					795	17.5
HXQ-※-1/※-※-※	10~35	1	80	M27×2		108	380	22
HXQ-※-2/※-※-※		2					580	28
HXQ-※-2.5/※-※-※	10~99	2.5	100	M42×2	50	127	510	31
HXQ-※-3.5/※-※-※	10~35	3.5					640	36
HXQ-※-5/※-※-※		5					830	44
HXQ-※-6/※-※-※		6					955	49
HXQ-※-7.5/※-※-※		7.5					1145	57
HXQ-※-2/※-※-※	10~35	2	125			163	390	44.5
HXQ-※-4/※-※-※		4					555	55.5
HXQ-※-5/※-※-※		5					635	61
HXQ-※-6/※-※-※		6					715	66.5
HXQ-※-6/※-※-※		6	150			194	600	86
HXQ-※-8/※-※-※		8					715	97
HXQ-※-10/※-※-※		10					830	107.5
HXQ-※-12/※-※-※		12					940	118
HXQ-※-10/※-※-※		10	180		70	219	670	90.5
HXQ-※-16/※-※-※		16					910	114
HXQ-※-25/※-※-※		25					1250	146
HXQ-※-32/※-※-※		32					1540	174
HXQ-※-35/※-※-※		35					1655	198
HXQ-※-40/※-※-※		40					1850	218
HXQ-※-45/※-※-※		45					2050	238
HXQ-※-50/※-※-※		50					2245	258
HXQ-※-25/※-※-※	20	25	195	M60×2			1116	121.5
HXQ-※-30/※-※-※		30					1285	131.5
HXQ-※-40/※-※-※		40					1620	151.5
HXQ-※-50/※-※-※		50					1955	172.5
HXQ-※-40/※-※-※	10~35	40	200			245	1615	280.5
HXQ-※-45/※-※-※		45					1770	301.5
HXQ-※-50/※-※-※		50					1930	322.5
HXQ-※-60/※-※-※		60					2250	365.5
HXQ-※-20/※-※-※		20	220			267	850	192
HXQ-※-32/※-※-※		32					1165	250
HXQ-※-40/※-※-※		40					1380	267
HXQ-※-50/※-※-※		50					1640	323
HXQ-※-60/※-※-※		60					1905	341
HXQ-※-80/※-※-※		80					2430	443
HXQ-※-40/※-※-※	10~35	40	250	M72×2	80	299	1025	229
HXQ-※-50/※-※-※		50					1410	263
HXQ-※-60/※-※-※		60					1615	297
HXQ-※-80/※-※-※		80					2020	364
HXQ-※-100/※-※-※		100					2430	432
HXQ-※-120/※-※-※		120					2840	500
HXQ-※-60/※-※-※		60	310			377	1245	482
HXQ-※-70/※-※-※		70					1380	525
HXQ-※-80/※-※-※		80					1510	563
HXQ-※-90/※-※-※		90					1645	605
HXQ-※-100/※-※-※		100					1775	645
HXQ-※-110/※-※-※		110					1910	686
HXQ-※-120/※-※-※		120					2040	726
HXQ-※-130/※-※-※		130					2175	770
HXQ-※-140/※-※-※		140					2305	810
HXQ-※-150/※-※-※		150					2440	850
HXQ-※-160/※-※-※		160					2570	890
HXQ-※-100/※-※-※		100	350			406	1560	730
HXQ-※-120/※-※-※		120					1770	788
HXQ-※-130/※-※-※		130					1870	817
HXQ-※-150/※-※-※		150					2080	876
HXQ-※-200/※-※-※		200					2600	1023
HXQ-※-215/※-※-※		215					2755	1067
HXQ-※-130/※-※-※		130	400			500	1620	1345
HXQ-※-150/※-※-※		150					1780	1434
HXQ-※-180/※-※-※		180					2020	1566
HXQ-※-200/※-※-※		200					2180	1656
HXQ-※-250/※-※-※		250					2570	1872
HXQ-※-350/※-※-※		350					3370	2316

Note: 1.Piston accumulator: HXQA-50/20-L-Y, nominal volume is 50L, nominal pressure is 20Mpa, thread connection. Medium is hydraulic liquid.
2.Design change is retained by our company and amendment is effected without further notice.

Bladder Repair Kits

1 General Description

The bladder is resistant to oil, acids, and alkalis, as well as being bend-resistant, highly strong, and durable.

2 Dimension

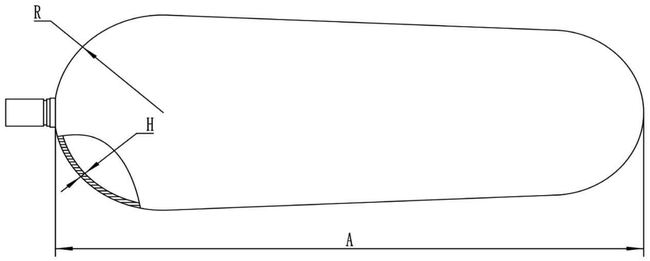

3 Technical Parameter

Series	Model	Dimension(mm)		
		A	R	H
PED	E4L	240	73	2.8
	E5L	310		
	E6L	360		
	114/1.5L	200	49	2
	114/2.5L	320		
	114/4L	380		
	114/6L	660		
	D12L	410	101	3
	D15L	457		
	D20L	612		
	D24.5L	735-750		
	D32L	1000		
	D35L	1230		
	D40L	1258		
	D42L	1538		
	D50L	1600		
ASME	1qt	145	48	1.8
	1pt	134	39	
	1gal	210	73	2.5
	2.5gal	290	101	3
	5gal	585		
	10gal	1100		
	11gal	1258		
	15gal	1625		

Accumulator QXF Charging Valve

1 General Description

QXF charging valve is the special check valve to charging the nitrogen for accumulator by charging tools. It turned off after charging.

2 Dimension

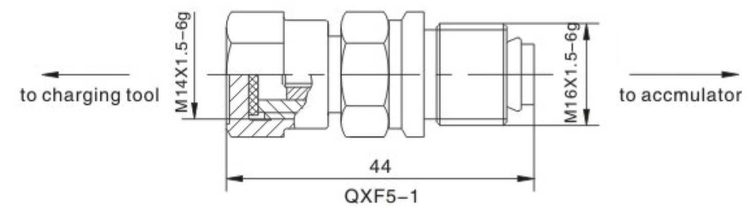

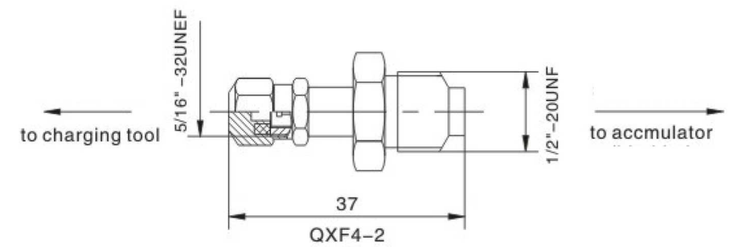

3 Technical Parameter

Model	Charging Range (MPa)	Nominal Diameter (mm)	Thread Connection		Accumulator Model	Weight (kg)
			Input(to charging tool)	Output(to accumulator)		
QXF5-1	0.4~40	5	M14x1.5-6g	M16x1.5-6g	Bladder Accumulator Piston Accumulator	0.07
QXF4-2	0.4~40	4	5/16"-32UNEF	1/2"-20UNF		0.03

4 Technical Parameter

1.Contact us if special requirement is needed.
2.Design change is retained by our company and amendment is effected without further notice.

FPU Charging Kit

1. **Model: FPU (Charging Kit)**
2. **Pressure Gauge (3 Kinds as Standard):** 10MPa，25MPa，40MPa
3. **Charging Pipe=1.5m (Standard)**、3m、6m
4. **Nitrogen Bottle Connection G0=G5/8** (It can be customized according to the requirements of different countries)
5. **Accumulator Gas Connection Thread** Standard: M28X1.5 Adapter: M14X1.5 UNF5/16 UNF1/2 UNF5/8 UNF7/8 G1/4
6. **Suitcase**

PRE-LOADING AND CHECKING SET

CQJ/GCQJ Type Accumulator Charging Accessory

1 Introduction

CQJ/GCQJ Type Accumulator Charging Accessory is used to charge gas, supply gas, adjust pressure and test pressure. It have the characters of compact structure, reliable safety, high-pressure resistance, compact resistance and good convenience.

2 Model Code

GCQJ ※ ※
(1) (2) (3)

1.CQJ: Diaphragm Accumulator Charging Kit
GCQJ: Bladder Accumulator/Piston Accumulator Charging Kit
2.Pressure Rating: 10、20、31.5MPa
3.Connecting Port: M28X1.5、M14X1.5、5/8-18UNF and so on

3 Technical Specifications

Model	Nominal pressure (MPa)	Compound Pressure Meter		Rubber Pipe		With accumulator joint size	Compound accumulator type	Weight (kg)
		Scale level (MPa)	Accuracy class (MPa)	Bore size(mm) X Number of steel wire layers	Lenght(mm)			
CQJ-16	10	16	2.5	Φ8x1	1500-5000	M14X1.5	Bladder Accumulator Piston Accumulator	1.7
CQJ-25	20	25						
CQJ-40	31.5	40						
GCQJ-16	10	16				M28X1.5	Diaphram Accumulator	
GCQJ-25	20	25						
GCQJ-40	31.5	40						

Accumulator Clamp

1 General Description

The special device designed to fix accumulator with the advantage of compact structure,flexible connection,nice appearance

2 Internal Structure Dimension

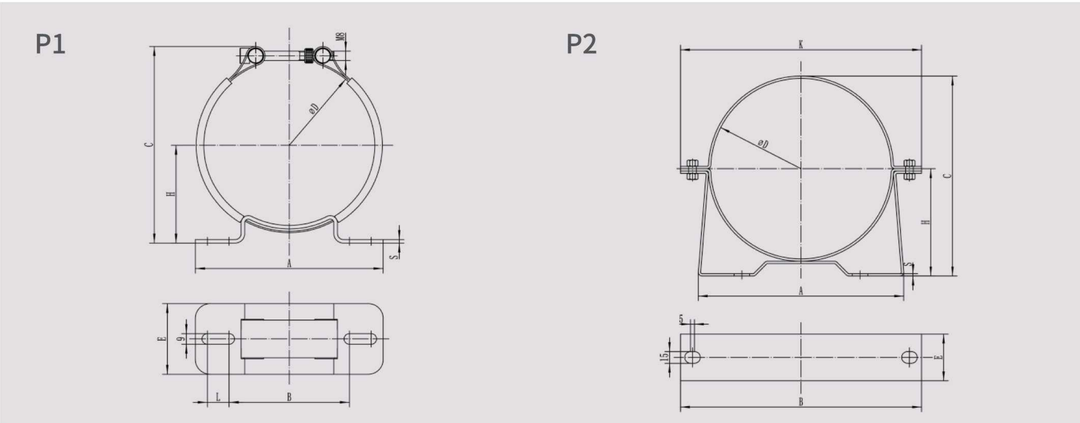

Model	A(mm)	B(mm)	Φ D(mm)	H(mm)	E(mm)	L(mm)	S(mm)	K(mm)	Remarks
NXJ-74	120	85	71-77	49	60	8	3	/	P1
NXJ-89	120	85	89-92	64	60	8	3	/	
NXJ-95	120	85	92-98	60	60	8	3	/	
NXJ-105	156	100	105-114	68	60	18	3	/	
NXJ-121	156	100	118-126	75	60	18	3	/	
NXJ-142	156	100	133-142	83	60	18	3	/	
NXJ-152	156	100	152-159	87	60	18	3	/	
NXJ-173	236	152	170-176	97	60	32	4	/	
NXJ-229	265	152	226-232	138	60	32	3	310	P2

3 Booking Note

1.Contact us if specialrequirement is needed.
2.Design change is retained by our company and amendment is effected without further notice.

Energy-saving Pneumatic Hydraulic Station

1 Introduction

Milehertz Energy-saving Pneumatic Hydraulic Station combines the advantages of pneumatic and hydraulic technology, it has the characteristics of high efficiency, energy saving, small size and easy installation. Compared to traditional electric hydraulic stations of the same power, it consumes 95% less electricity. It is mainly used in various work scenarios that require hydraulic systems.such as machining centers, lathes, and automation equipment.

2 Model Code

ALP-10-A F-12- K3 B - DC24

- Serial Number: ALP
- Boost Ratio: 05: 1:5 07: 1:7 10: 1:10 12: 1:12 22: 1:22
- Pump Characteristics: A- Gas-liquid Pressurization
- Pressure Display: F-Pressure Gage
- Fuel Tank Volume and Color: 12L (Non standard 20L, 30L, 50L); RAL7035
- Valve Group Options: K1- 1 group K2-2 group K3-3 group (1 group: Table 1 direction valve)
- Stacked Valve Type: Factory Standard B Type, 6-way diameter
- Voltage: DC24, DC12, AC220, AC110

3 Booster Pump Parameters

Booster Pump Model	Pressure Ratio	Drive Air (bar)	Max Output Pressure		Max Flow (L/min)	Gas consumption (NL/cycle)
			bar	psi		
PWL-005	1 : 5	3 - 6	30	435	13.5	4.57
PWL-007	1 : 7	3 - 6	42	609	11	4.8
PWL-0010	1 : 10	3 - 6	60	870	9	4.9
PWL-0012	1 : 12	3 - 6	72	1044	8	4.87
PWL-0022	1 : 22	3 - 6	130	1885	4.5	4.92

GLC Series Calandria Oil Cooler

1 Introduction

Oil Cooler is mainly used to cool the working medium (low viscosity) in lubrication system and hydraulic system to the required temperature.

2 Model Code

GL C 2 3

- **GL** — **Calandria oil Cooler**
- **C** — **Finned Tube**
- **2** — **Series Number: Series 2**
- **3** — **Nominal Heat Exchange Area**

3 Technical Specifications

(P.S Oil port and water port include thread way and flange way.)

Specifications / Model	Heat Exchange Area (M^2)	Pressure (MPa)			Temperature (°C)				Medium Viscosity $10^{-6}M^2/S$	Oil Flow Range (L/min)	Oil/Water Flow Scale	Heat Exchange Volume (Kcal/h)	Weight (kg)
		Working Pressure	Oil Pressure Drop	Water Pressure Drop	Working Water Temperature	Working Oil Temperature	Enter Oil Temperature	Get Out Oil Temperature					
GLC_1-0.4	0.4	0.63 1	≤0.1	≤0.05	25-30	≤100	55	≤46	10-50	10-35	1:1	1300-3300	10
-0.6	0.6									25-60		3300-5100	13
-0.8	0.8									35-60		3350-6500	15
-1	1									60-75		6100-7200	17
-1.2	1.2									60-85		6400-8400	19
GLC_2-1.3	1.3	0.63	≤0.1	≤0.05	25-30	≤100	55	≤46	10-50	30-85	1:1	6400-11000	21
-1.7	1.7									30-113		7400-17000	26
-2.1	2.1									30-113		9200-21500	29
-2.6	2.6									35-125		11300-26000	33
-3	3									35-125		12700-30000	37
-3.5	3.5									40-150		14500-34500	41
GLC_3-4	4	0.63 1	≤0.1	≤0.05	25-30	≤100	55	≤46	10-50	35-170	1:1	14000-31000	57
-5	5									35-190		17000-35000	70
-6	6									40-220		20000-45000	83
-7	7									45-240		24000-49500	90
-8	8									50-280		27000-56000	96
-9	9									50-290		31000-67000	105
-10	10									60-320		33590-69500	110
-11	11									60-350		37500-79000	118
GLC_4-13	13	0.63 1	≤0.1	≤0.05	25-30	≤100	55	≤46	10-50	50-300	1:1	35000-70000	152
-15	15									50-320		38000-75000	164
-17	17									60-350		42000-83000	175
-19	19									60-400		46000-89500	188
-21	21									70-430		50000-93000	200
-23	23									70-450		55000-99000	213
-25	25									80-480		60000-102000	225
-27	27									80-520		60000-122000	238
GLC_5-30	30	0.63 1 1.6	≤0.1	≤0.05	25-30	≤100	55	≤46	10-50	150-650	1:1	8-15	255
-34	34									150-700		8-17	280
-37	37									200-800		10-19	298
-41	41									200-850		10-21	322
-44	44									250-900		11-25	340
-47	47									250-950		11-27	357
-51	51									300-1000		13-30	380
-54	54									300-1100		13-33	398
GLC_6-55	55	0.63 1 1.6	≤0.1	≤0.05	25-30	≤100	55	≤46	10-50	350-1150	1:1	15-35	418
-60	60									350-1200		15-38	442
-65	65									400-1250		17-41	469
-70	70									400-1300		17-45	498
-75	75									500-1350		20-50	525
-80	80									500-1400		20-55	550
-85	85									600-1500		25-60	575
-90	90									600-1600		30-70	602

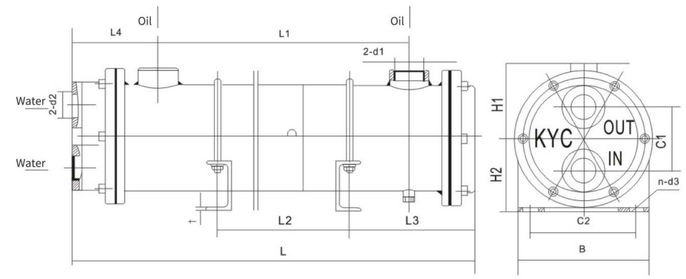

Parameter / Model	L	L1	L2	L3	L4	B	C1	C2	D	H1	H2	t	d1	d2	n-d3
GLC_1 -0.4	383	240	145	116	75	132	48	102	83	68	74	2	G1"	G3/4"	4-∮9
-0.6	548	405	310												
-0.8	675	532	435												
-1	808	665	570												
-1.2	948	805	715												
GLC_2 -1.3	542	374	225	153	90	170	78	138	121	87	96	2	G1"	G1"	4-∮11
-1.7	668	500	350												
-2.1	802	634	485												
-2.6	944	776	630												
-3	1094	926	780												
-3.5	1252	1084	935												
GLC_3 -4	815	570	380	203	136	210	100	170	168	109	117	2	G1 1/2"	G1 1/4"	4-∮15
-5	965	720	530												
-6	1115	870	680												
-7	1285	1040	856												
-8	1445	1200	1010										G2"	G1 1/2"	
-9	1605	1360	1170												
-10	1775	1530	1340												
-11	1955	1710	1520												
GLC_4 -13	1270	985	745	248	156	270	130	220	219	137	150	3	G2"	G2"	4-∮19
-15	1430	1145	905												
-17	1590	1305	1065												
-19	1760	1475	1235												
-21	1940	1655	1415												
-23	2110	1825	1585												
-25	2290	2005	1765												
-27	2460	2175	1935												
GLC_5 -30	1870	1570	1320	260	165	330	168	270	273	168	198	9	G2"	G2 1/2"	4-∮23
-34	2090	1790	1540												
-37	2260	1960	1710												
-41	2480	2180	1930												
-44	2650	2350	2100												
-47	2810	2510	2260												
-51	3030	2730	2480												
-54	3200	2900	2650												
GLC_6 -55	2209	1860	1590	295	189	390	196	300	325	198	223	9	G2 1/2"	G3"	4-∮23
-60	2389	2040	1770												
-65	2569	2220	1950												
-70	2749	2400	2130												
-75	2929	2580	2310												
-80	3109	2760	2490												
-85	3289	2940	2670												
-90	3469	3120	2850												

KHB KHM Series High Pressure Ball Valve (International Standard)

1 Model Code

KHB	-	G1/2	-	1	1	1	2	-	01	-	*
(1)		(1)		(3)	(4)	(5)	(6)		(7)		(8)

1、Series Code: KHB Series KHM Series
2、Joint Code: M**, G**, NPT**, **LR, **SR
3、Valve body Material: 1-carbon steel, 2-stainless stee
4、Ball body Material: 1-alloy steel, 3-stainless steel
5、Ball Sealing: 1-POM, 2-PEEK
6、Sealing Material : 2-NBR, 4-FPM/FKM
7、Handle Type: 01-Steel straight handle; 09-No handle
8、Surface Treatment: Blank-phosphorization; G-Zinc plated

2 Overall Dimension

KHB

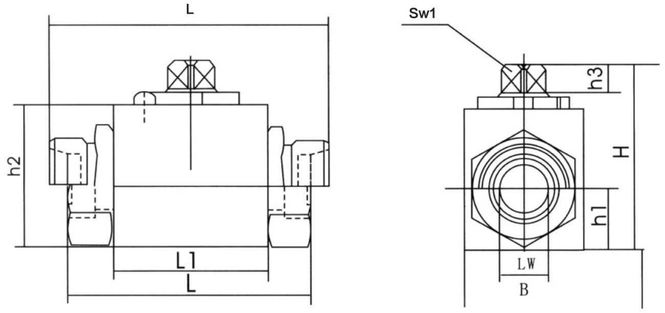

KHM

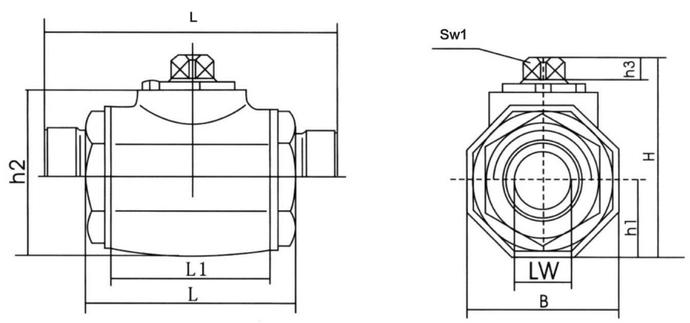

Connection Type	Model	DN	LW	RA	d1	l	L	L1	B	H	h1	h2	h3	Sw1	Sw2
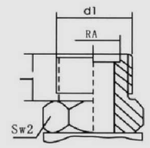	KHB-M12x1.5	04	04	8	M12x1.25	10	61	35	30	48	13	30	8	7	19
	KHB-M16x1.5	06	06	11	M16x1.5	11	69	35	30	48	13	30	8	7	19
	KHB-M22×1.5	08	08	16	M22x1.5	12	76	42	35	53	17	40	8	9	27
	KHB-M27×1.5	10	10	20	M27x1.5	12	76	42	35	53	17	40	8	9	27
	KHB-M30x1.5	16	15	24	M30x1.5	13	84	47	38	62	19	45	11	9	32
	KHB-M36×2	20	19	30	M36x2	15	103	60	48	75	24.5	55	11	12	41
	KHB-M42x2	25	24	35	M42x2	18	116	65	57	82	28.5	64	11	12	50
	KHM-M52x2	32	30	40	M52x2	20	149	84	75	102.7	37.5	84.2	12	17	60
	KHM-M60x2	40	36	50	M60x2	22	174	91	85	113.7	42.5	95.2	12	17	70
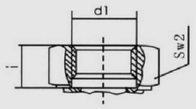	KHB-G1/8	04	06	-	G1/8	10	69	35	30	48	13	30	8	7	19
	KHB-G1/4	06	06	-	G1/4	14	69	35	30	48	13	30	8	7	22
	KHB-G3/8	10	10	-	G3/8	14	72	42	35	53	17	40	8	9	27
	KHB -G1/2	16	15	-	G1/2	16	83	41	38	62	19	45	11	9	32
	KHB -G3/4	20	20	-	G3/4	18	95	60	48	75	24.5	55	11	12	41
	KHB -G1	25	25	-	G1	20.5	113	65	57	82	28.5	64	11	12	50
	KHM-G11/4	32	30	-	G11/4	22	110	84	75	102	37.5	84,2	12	17	60
	KHM-G11/2	40	38	-	G11/2	24	130	91	85	113.7	42.5	95.2	12	17	70
	KHM-G2	50	48	-	G2	26	140	100	105	131.2	52.5	112.7	12	17	80
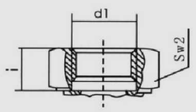	KHB -NPT1/8	04	06	-	NPT1/8	10	69	35	30	48	13	30	8	7	19
	KHB -NPT1/4	06	06	-	NPT1/4	14	69	35	30	48	13	30	8	7	22
	KHB -NPT3/8	10	10	-	NPT3/8	14	72	42	35	53	17	40	8	9	27
	KHB-NPT1/2	16	15	-	NPT1/2	16	83	41	38	62	19	45	11	9	32
	KHB-NPT3/4	20	20	-	NPT3/4	18	95	60	48	75	24.5	55	11	12	41
	KHB-NPT1	25	25	-	NPT1	20.5	113	65	57	82	28.5	64	11	12	50
	KHM-NPT11/4	32	30	-	NPT11/4	22	110	84	75	102.7	37.5	84.2	12	17	60
	KHM-NPT11/2	40	38	-	NPT11/2	24	130	91	85	113.7	42.5	95.2	12	17	70
	KHM-NPT2	50	48	-	NPT2	26	140	100	105	131.2	52.5	112.7	12	17	80
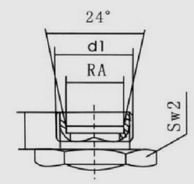	KHB-06LR	04	04	06	M12x1.5	10	67	35	30	48	13	30	8	7	19
	KHB-08LR	06	06	08	M14x1.5	10	67	35	30	48	13	30	8	7	19
	KHB-10LR	08	08	10	M16x1.5	11	74	42	35	53	17	40	8	7	27
	KHB-12LR	10	10	12	M18x1.5	11	74	42	35	53	17	40	8	9	27
	KHB-15LR	12	12	15	M22x1.5	12	82	47	38	62	19	45	11	9	32
	KHB-18LR	16	15	18	M26×1.5	12	82	47	38	62	19	45	11	9	32
	KHB-22LR	20	19	22	M30x2	14	101	60	48	75	24.5	55	11	12	41
	KHB-28LR	25	24	28	M36x2	14	108	65	57	82	28.5	64	11	12	50
	KHB-35LR	32	30	35	M45x2	16	141	84	75	102.7	37.5	84.2	12	17	60
	KHB-42LR	40	36	42	M52×2	16	162	91	85	113.7	42.5	95.2	12	17	70
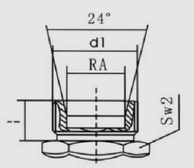	KHB-08SR	04	05	08	M16x1.5	12	73	35	30	48	13	30	8	7	19
	KHB-10SR	06	06	10	M18×1.5	12	73	35	30	48	13	30	8	7	19
	KHB-12SR	08	08	12	M20x1.5	12	76	42	35	53	17	40	8	9	27
	KHB-14SR	10	10	14	M22x1.5	14	80	42	35	53	17	40	8	9	27
	KHB-16SR	12	12	16	M24x1.5	14	86	47	38	62	19	45	11	9	32
	KHB-20SR	16	15	20	M30x2	16	90	47	38	62	19	45	11	9	32
	KHB-25SR	20	20	25	M36×2	18	109	60	48	75	24.5	55	11	12	41
	KHB-30SR	25	25	30	M42x2	20	120	65	57	82	28.5	64	11	12	50
	KHM-38SR	32	30	38	M52x2	22	153	84	75	102.7	37.5	84.2	12	17	60

KHB3K(BK3)Two-position Three-way High Pressure Ball Valve(International Standard)

1 Introduction

KHB3K(BK3) - G1/2 - L 1 1 1 2 - 01 - *

(1) (2) (3) (4) (5) (6) (7) (8) (9)

1、Series Code: KHB 3K Series Two-position Three-way High Pressure Ball Valve

2、Joint Code: M**，G**，NPT**，**LR，**SR

3、Function code is mentioned below

4、Valve body material : 1- steel,2-stainless steel

5、Ball body material: 1-steel，2-brass，3-stainless steel

6、Working temperature: 1:-25℃~+100℃; 2: -30℃~+170℃.

7、Sealing material : 2-NBR,4-FPM/FKM

8、Surface treatment: Blank-phosphorization，G-Yellow zinc plated

2 Function

The sealing function is effective only in the following two situations:

A: The closed port's pressure is zero.

B: The closed port's pressure is lower than the other two open ones.

Syboml

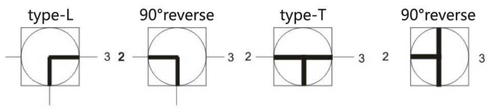

3 Overall Dimension

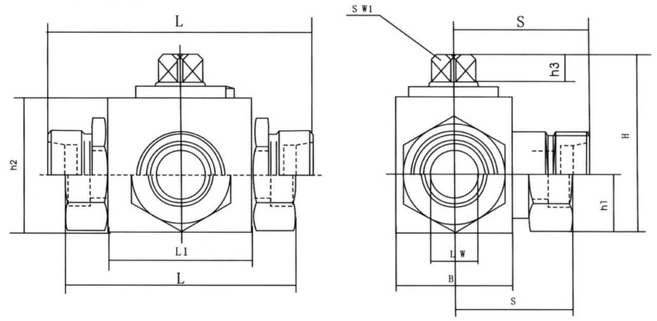

KHB3K-M12X1.25

Connection way	Model	DN	Lw	RA	d1	l	L	L1	B	H	h1	h2	h3	S	sw1	sw2
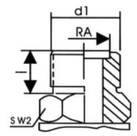	KHB3K-M12X1.25	4	4	8	M12X1.25	10	61	35	30	48	13	30	8	35	7	19
	KHB3K-M16X1.5	6	6	11	M16X1.5	11	69	35	30	48	13	30	8	35	7	19
	KHB3K-M22x1.5	8	8	16	M22x1.5	12	76	42	35	53	17	40	8	38	7	27
	KHB3K-M27x1.5	10	10	20	M27X1.5	12	76	42	35	53	17	40	8	38	9	27
	KHB3K-M30X1.5	16	15	24	M30×1.5	13	84	47	38	62	19	45	11	42	9	32
	KHB3K-M36x2	20	19	30	M36×2	15	103	60	48	75	24.5	55	11	52	12	41
	KHB3K-M42x2	25	24	35	M42x2	18	116	65	57	82	28.5	64	11	58	12	50
	KHB3K-M52×2	32	30	40	M52x2	20	149	84	75	102.7	37.5	84.2	12	72	17	60
	KHB3K-M60x2	40	36	50	M60x2	22	174	91	85	113.7	42.5	95.2	12	79.5	17	70
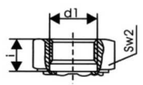	KHB3K-G1/8	4	6	-	G1/8	10	69	35	30	48	13	30	8	35	7	19
	KHB3K-G1/4	6	6	-	G1/4	14	69	35	30	48	13	30	8	35	7	22
	KHB3K-G3/8	10	10	-	G3/8	14	72	42	35	53	17	40	8	36	9	27
	KHB3K-G1/2	16	15	-	G1/2	16	83	47	38	62	19	45	11	42	9	32
	KHB3K-G3/4	20	20	-	G3/4	18	95	60	48	75	24.5	55	11	49	12	41
	KHB3K-G1	25	25	-	G1	20.5	113	65	57	82	28.5	64	11	56.5	12	50
	KHB3K-G11/4	32	30	-	G11/4	22	110	84	75	102.7	37.5	84.2	12	55	17	60
	KHB3K-G11/2	40	38	-	G11/2	24	130	91	85	113.7	42.5	95.2	12	65	17	70
	KHB3K-G2	50	48	-	G2	26	140	100	105	131.2	52.5	112.7	12	70	17	80
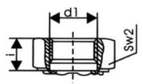	KHB3K-NPT1/8	4	6	-	NPT1/8	10	69	35	30	48	13	30	8	35	7	19
	KHB3K-NPT1/4	6	6	-	NPT1/4	14	69	35	30	48	13	30	8	35	7	22
	KHB3K-NPT3/8	10	10	-	NPT3/8	14	72	42	35	53	17	40	8	36	9	27
	KHB3K-NPT1/2	16	15	-	NPT1/2	16	83	47	38	62	19	45	11	42	9	32
	KHB3K-NPT3/4	20	20	-	NPT3/4	18	95	60	48	75	24.5	55	11	49	12	41
	KHB3K-NPT1	25	25	-	NPT1	20.5	113	65	57	82	28.5	64	11	56.5	12	50
	KHB3K-NPT11/4	32	30	-	NPT11/4	22	110	84	75	102.7	37.5	84.2	12	55	17	60
	KHB3K-NPT11/2	40	38	-	NPT11/2	24	130	91	85	113.7	42.5	95.2	12	65	17	70
	KHB3K-NPT2	50	48	-	NPT2	26	140	100	105	131.2	52.5	112.7	12	70	17	80
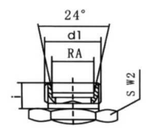	KHB3K-06LR	4	4	6	M12X1.5	10	67	35	30	48	13	30	8	34.5	7	19
	KHB3K-08LR	6	6	8	M14x1.5	10	67	35	30	48	13	30	8	34.5	7	19
	KHB3K-10LR	8	8	10	M16X1.5	11	74	42	35	53	17	40	8	37	7	27
	KHB3K-12LR	10	10	12	M18x1.5	11	74	42	35	53	17	40	8	37	9	27
	KHB3K-15LR	12	12	15	M22x1.5	12	82	47	38	62	19	45	11	40	9	32
	KHB3K-18LR	16	15	18	M26X1.5	12	82	47	38	62	19	45	11	42	12	32
	KHB3K-22LR	20	19	22	M30×2	14	101	60	48	75	24.5	55	11	52	12	41
	KHB3K-28LR	25	24	28	M36x2	14	108	65	57	82	28.5	64	11	54	12	50
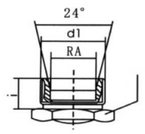	KHB3K-08LR	4	5	8	M16X1.5	12	73	35	30	48.0	13	30	8	37	7	19
	KHB3K-10SR	6	6	10	M18×1.5	12	73	35	30	48.0	13	30	8	37	7	19
	KHB3K-12SR	8	8	12	M20x1.5	12	76	42	35	53	17	40	8	38	7	27
	KHB3K-14SR	10	10	14	M22x1.5	14	80	42	35	53	17	40	8	40	9	27
	KHB3K-16SR	12	12	16	M24X1.5	14	86	47	38	62	19	45	11	43.5	9	32
	KHB3K-20SR	16	15	20	M30x2	16	90	47	38	62	19	45	11	45.5	12	32
	KHB3K-25SR	20	20	25	M36x2	18	109	60	48	75	24.5	55	11	56	12	41
	KHB3K-30SR	25	25	30	M42x2	20	120	65	57	82	28.5	64	11	60	12	50

KHP KHP3K Series Plate High Pressure Ball Valve

1 Model Code

KHB3K	-	10	-	L	-	1	1	1	2	-	02
(1)		(2)		(3)		(4)	(5)	(6)	(7)		(8)

1.Series Code: KHP-Plate two-way

KHP3K-Plate three-way

2.Nominal Size: 06 10 16.....mm

3.Function Code: L,T (without two-way)

4.Valve body,screw plug material: 1-carbon steel

5.Ball body and valve lockmaterial:1-alloy steel

6.Ball Sealing Material:1-POM

7.Other Sealing Material:2-NBR,4-FPM/FKM

P.S Material1112 is the nomal combination

2 Funciton Code

P.S The oil can only be put in from port 1 for this kind of three-way valve. The sealing function is effective only in the following two situations:

A: The closed port's pressure is zero.

B: The closed port's pressure is lower than the other two open ones.

type-L 90° reverse

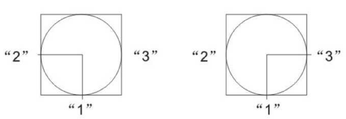

type-T 90° reverse

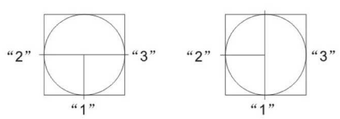

3 Overall Dimension

1、KHP(PKH)

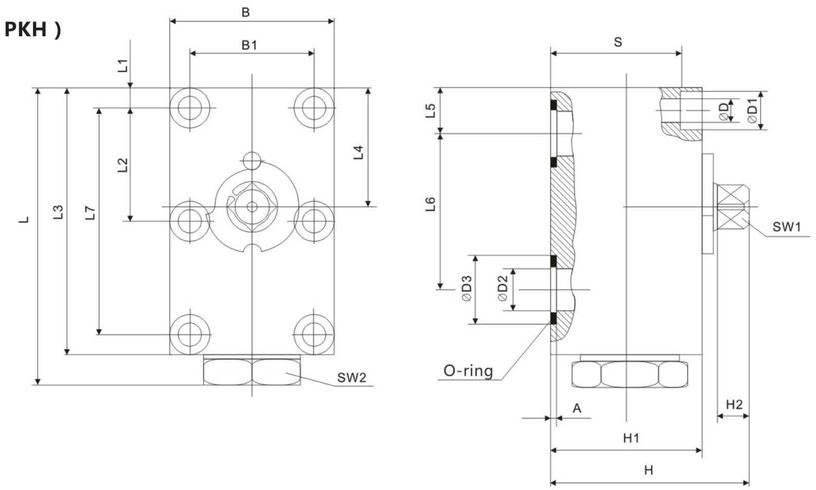

Model	DN	Lw	L	L1	L2	L3	L4	L5	L6	L7	B	B1
KHP(PKH)-06	6	6	64	8.5	17.5	59	25	8.5	35	35	40	27
KHP(PKH)-10	10	9.5	80	8	27.5	71	29.5	10	44	55	56	40
KHP(PKH)-16	16	16	110	8.5	41.5	100	43.5	17	58	83	60	45
KHP(PKH)-20	20	20	127	10	48.5	117	51	20	69	97	70	51
KHP(PKH)-25	25	25	145	10	57.5	135	62	24	81	115	80	60
KHP(PKH)-32	32	30	177	12	68	165	75	29	96	136	100	78
KHP(PKH)-40	40	38	192	28.5	56	180	85.5	28.5	112	112	130	95
KHP(PKH)-50	50	48	245	38	68	220	106	38	136	136	149	112

Model	SW1	SW2	H	H1	H2	D	D1	D2	D3	A	S	0-Ring/GB1235
KHP(PKH)-06	9	22	39	30	6	6.6	11	6	12	1.4	23	12x1.9
KHP(PKH)-10	9	30	54.5	42	8	9	13.5	9.5	16	1.8	33	16x2.4
KHP(PKH)-16	12	36	67.5	50	11	9	13.5	16	25	1.8	41	25x2.4
KHP(PKH)-20	14	41	80	62	12	10.5	16.5	20	30	2.4	51	30x3.1
KHP(PKH)-25	14	50	86	67	12	10.5	16.5	25	35	2.4	56	35x3.1
KHP(PKH)-32	17	65	110	90	14	13	19	32	40	2.4	77	40x3.1
KHP(PKH)-40	17	75	120	100	14	17.5	26	38	50	2.4	82	50x3.1
KHP(PKH)-50	17	75	130	110	14	22	33	48	56	2.7	88	56x3.5

Model	DIN912(GB70-85) Inner Hexagon Screw Thread	Torque MA(Nm) Rub Coefficient u =0.14 Time
KHP(PKH)-06	M6-10.9	13
KHP(PKH)-10	M8-10.9	30
KHP(PKH)-16	M8-12.9	35
KHP(PKH)-20	M10-12.9	60
KHP(PKH)-25	M10-12.9	60
KHP(PKH)-32	M12-12.9	110
KHP(PKH)-40	M16-12.9	300
KHP(PKH)-50	M20-12.9	600

KHP KHP3K Series Plate High Pressure Ball Valve

(2)KHP3K

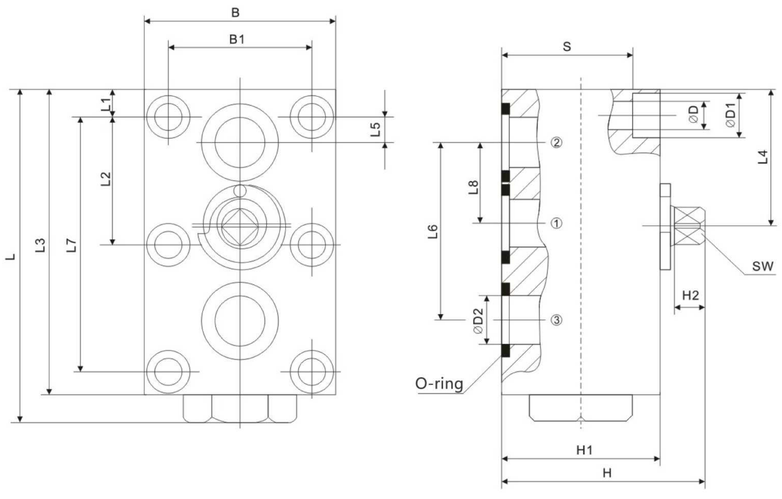

Model	L	L1	L2	L3	L4	L5	L6	L7	L8	B
KHP3K-06	64	8.5	17.5	59	25	0	35	35	17.5	40
KHP3K-10	80	8	27.5	71	29.5	2.5	44	55	19	56
KHP3K-16	110	8.5	41.5	100	43.5	8.5	58	83	26.5	60
KHP3K-20	127	10	48.5	117	51	10	69	97	32	70
KHP3K-25	145	10	57.5	135	62	14	81	115	38	80
KHP3K-32	177	12	68	165	75	17	96	136	46	100
KHP3K-40	192	28.5	56	180	85.5	0	112	112	56	130
KHP3K-50	245	38	68	220	106	0	136	136	68	149

Model	B1	H	H1	H2	D	D1	D2	S	SW	O形圈/GB1235
KHP3K-06	27	39	30	6	6.6	11	6	23	9	12x1.9
KHP3K-10	40	54.5	42	8	9	13.5	9.5	33	9	16x2.4
KHP3K-16	45	67.5	50	11	9	13.5	16	41	12	25x2.4
KHP3K-20	51	80	62	12	10.5	16.5	20	51	14	30x3.1
KHP3K-25	60	85	67	12	10.5	16.5	25	56	14	35x3.1
KHP3K-32	78	110	90	14	13	19	32	77	17	40x3.1
KHP3K-40	95	120	100	14	17.5	26	38	82	17	50x3.1
KHP3K-50	112	130	110	14	22	33	48	88	17	56x3.5

Model	KHP3K-06	KHP3K-10	KHP3K-16	KHP3K-20	KHP3K-25	KHP3K-32	KHP3K-40	KHP3K-50
安装螺钉/GB70-85	M6x30	M8x45	M8x50	M10x65	M10x70	M12x95	M16x110	M20x110
扭矩(Nm)	13	30	35	60	60	110	300	600

1.Screw intensity: class 10.9， the screw is selected according to"S"size，its length is 1.25~1.5 times of its diameter.
2.Twisting moment(Nm) is a standard data when the friction u=0.14.

KHB-AS KHM-AS Series High Pressure Ball Valve(with welded pipe)

1 Model Code

KHB-AS	-	160	-	20	-	1	1	1	2	-	02
(1)		(2)		(3)		(4)	(5)	(6)	(7)		(8)

1.Series Code: KHB--AS
KHM--AS
2.Pressure Range:160bar
3.Nominal Size:06~65mm
4.Valve Body Material:1-carbon steel, 2-stainless steel
5.Ball Body Material:1-alloy steel, 3-stainless steel
6.Ball Sealing Material:1-POM,4-PTFE
7.Sealing material(Linking valve body and joint):2-NBR,4-FRM
P.S Material1112 is the nomal combination

2 Overall Size

BKH-SAE-※-※-D/S-Lu

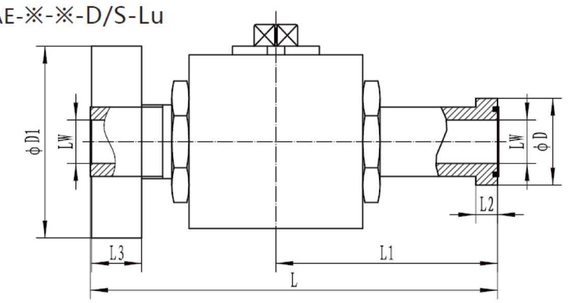

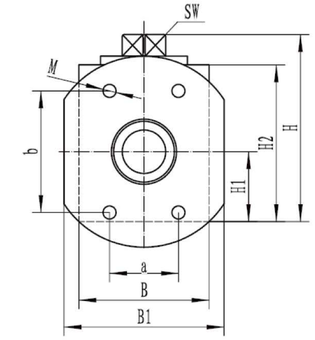

210bar(3000psi)																	
Model	DN	PN	L	L1	L2	L3	D	D1	a	b	M	B	B1	H	H1	H2	SW
BKH-SAE210-13-D/S-Lu	13	210	145	86	6.8	16	30.2	57	17.5	38.1	M8	35	46	52.5	17	40	9
BKH-SAE210-20-D/S-Lu	20	210	165	100	6.8	18	38.1	70	22.2	47.6	M10	48	52	75	24	57	14
BKH-SAE210-25-D/S-Lu	25	210	181.5	107.5	8.1	19	44.4	77	26.2	52.4	M10	57	62	82	28.5	64	14

420bar(6000psi)																	
Model	DN	PN	L	L1	L2	L3	D	D1	a	b	M	B	B1	H	H1	H2	SW
BKH-SAE210-13-D/S-Lu	13	420	150	90	7.9	22	31.8	61	18.2	40.5	M8	35	48	52.5	17	40	9
BKH-SAE210-20-D/S-Lu	20	315	168	100	8.9	23	41.3	76	23.8	50.8	M10	48	60	75	24	57	14
BKH-SAE210-25-D/S-Lu	25	315	199	125	9.6	27	47.6	86	27.8	57.2	M12	57	70	82	28.5	64	14